clear solutions Inc.

Assembly Instructions #8909

Shelves (tall side to back)

1

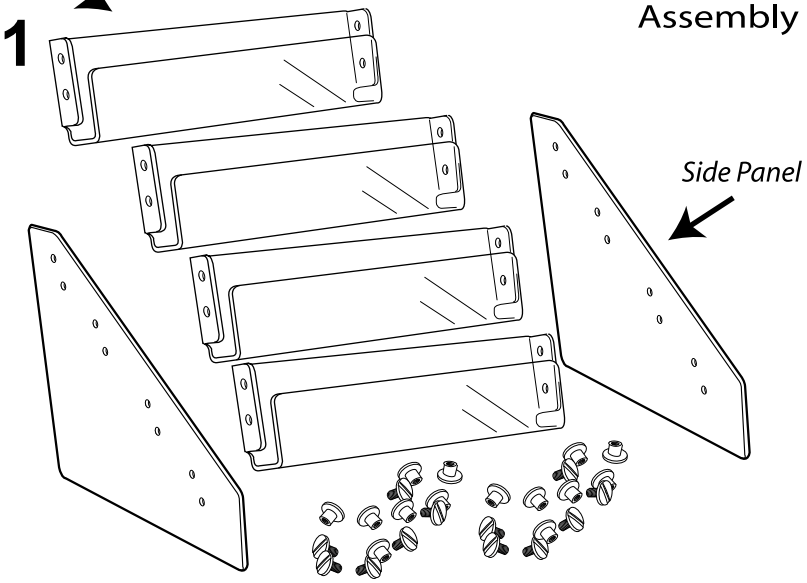

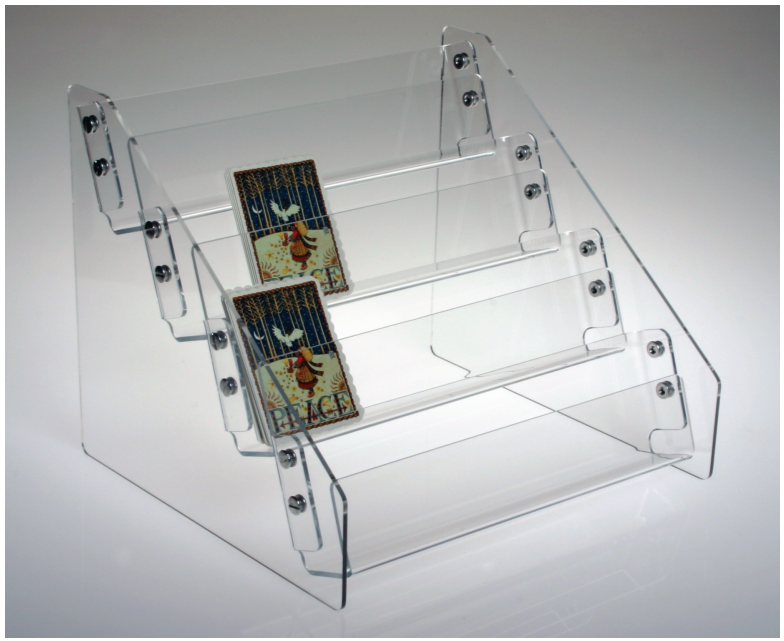

Tools Needed: flat screwdriver or thin coin (a dime works best)

1, Identify all parts and peel protective layer from sides before assembly.

2, On a clean flat surface, line up the holes of one side panel with the holes in the shelves. Note the tall side of each shelf faces the back of the unit. losely attach each shelf to the side panel with the binding screws and nuts porvided.

3, Turn unit on its side and attach the second side to each shelf as shown. Turn the shelf unit upright and adjust shelf angles and check for square before tightening screws until just snug.

Binding Post Screw & Nut

2

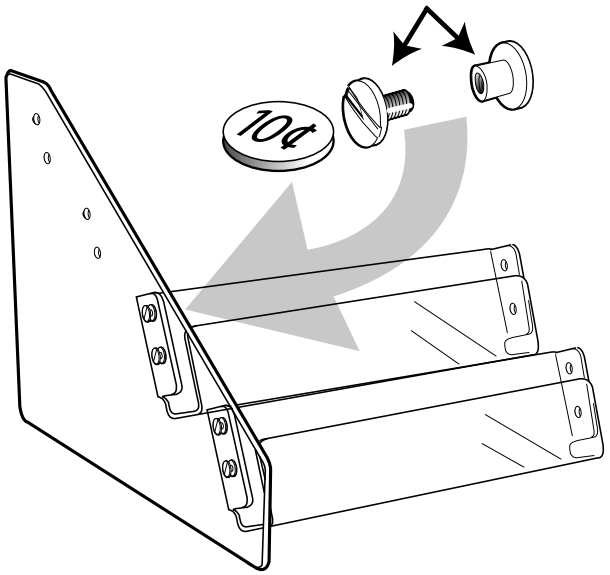

3

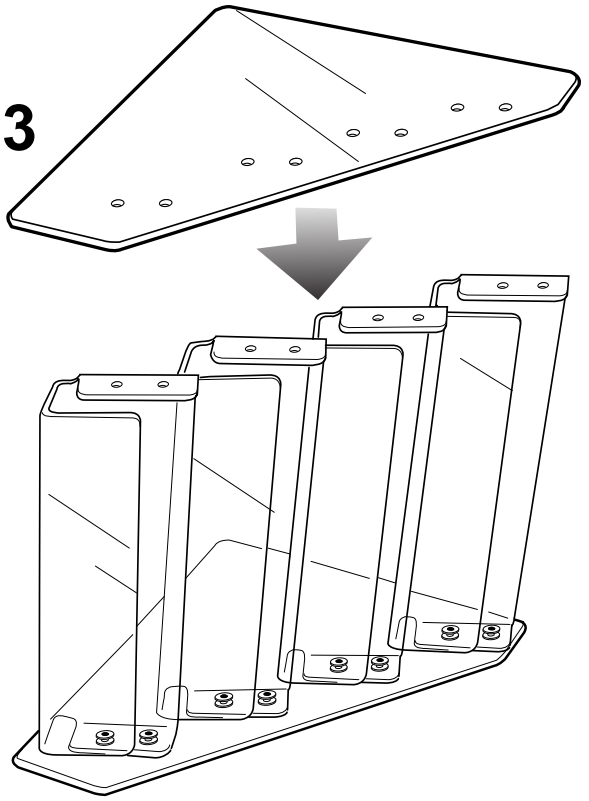

©Clear Solutions, Inc 9/18/13

Phone 800-257-4550 E-mail info@cleardisplays.com